Inertial Sensing & Navigation

3/9/2016

GPS Noise



FIGURE 1 GNSS-only results in downtown Calgary

Source: www.insidegnss.com
INS Face Off: MEMS versus FOGs

Using INS to Avoid Noise



FIGURE 3 Integrated MEMS/GNSS trajectory in downtown Calgary

Source: www.insidegnss.com
INS Face Off: MEMS versus FOGs

Offroad INS-only Navigation

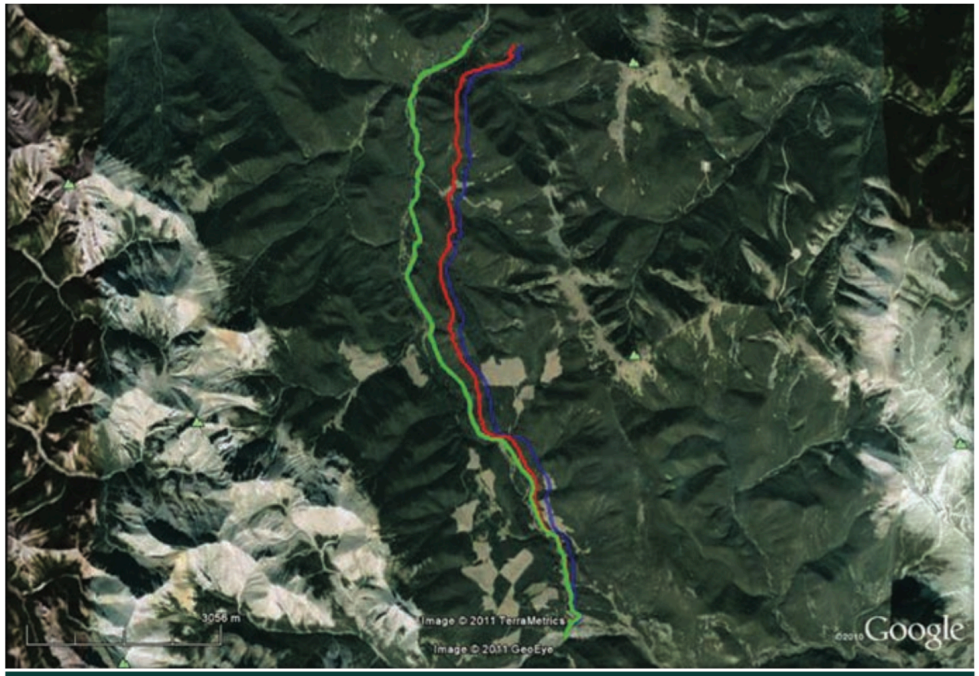
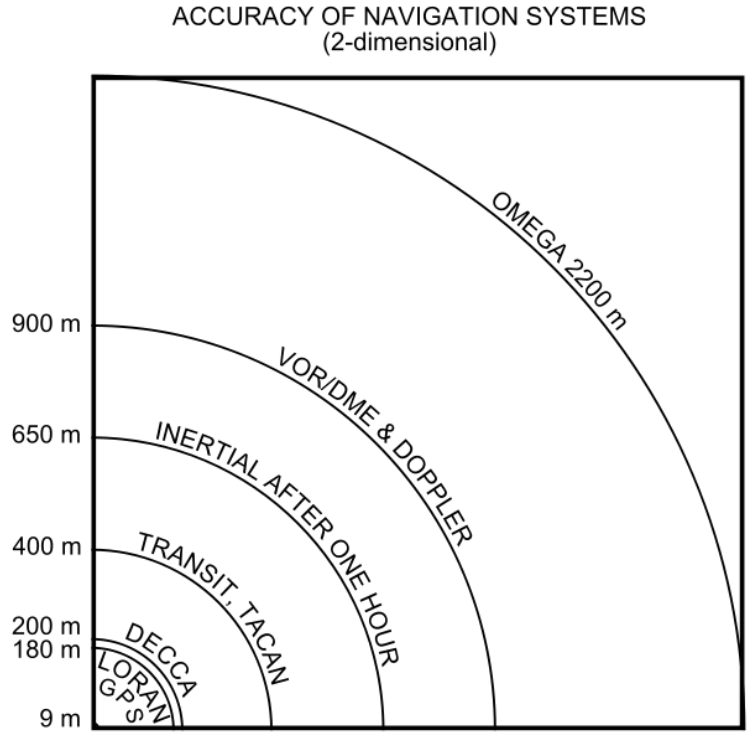


FIGURE 5 INS-only results off-road: reference in green, FOG in red, MEMS in blue

Source: www.insidegnss.com
INS Face Off: MEMS versus FOGs

INS Accuracy



Source: Wikipedia

MEMS Accelerometer

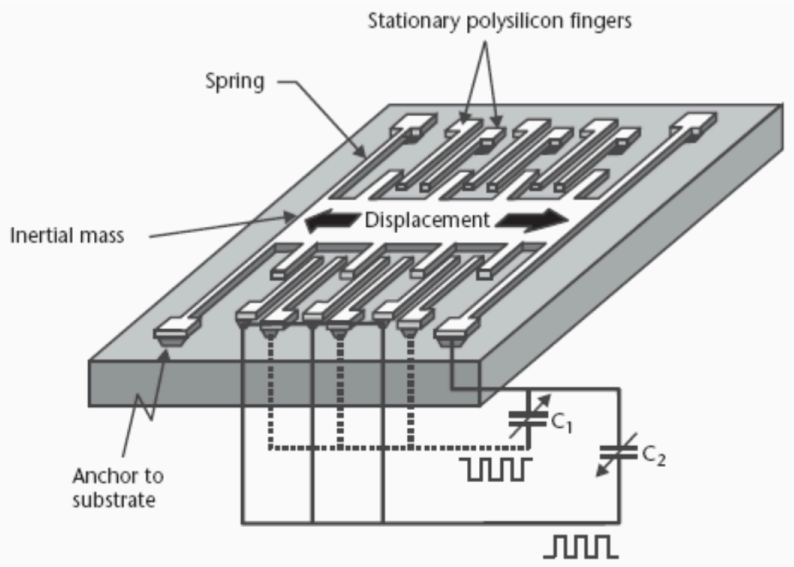


Figure 1.2 Illustration of the basic structure of the ADXL family of surface micromachined accelerometers

Source: Design and Analysis of a MEMS Comb Vibratory Gyroscope, Haifeng Dong MS Thesis

Tuning-fork Gyroscope

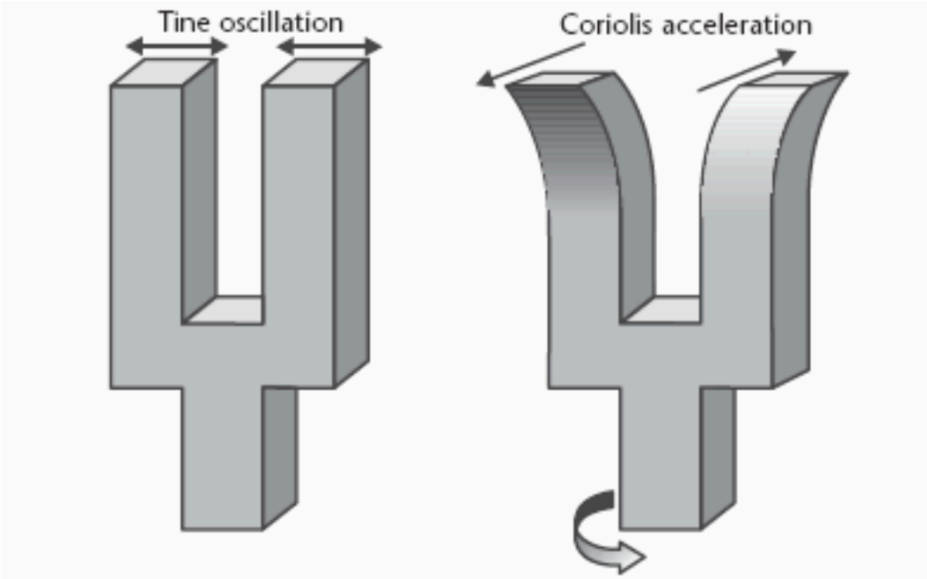


Figure 2.5 Tuning fork structure for angular-rate sensing

Source: Design and Analysis of a MEMS Comb Vibratory Gyroscope, Haifeng Dong MS Thesis

MEMS Gyroscope

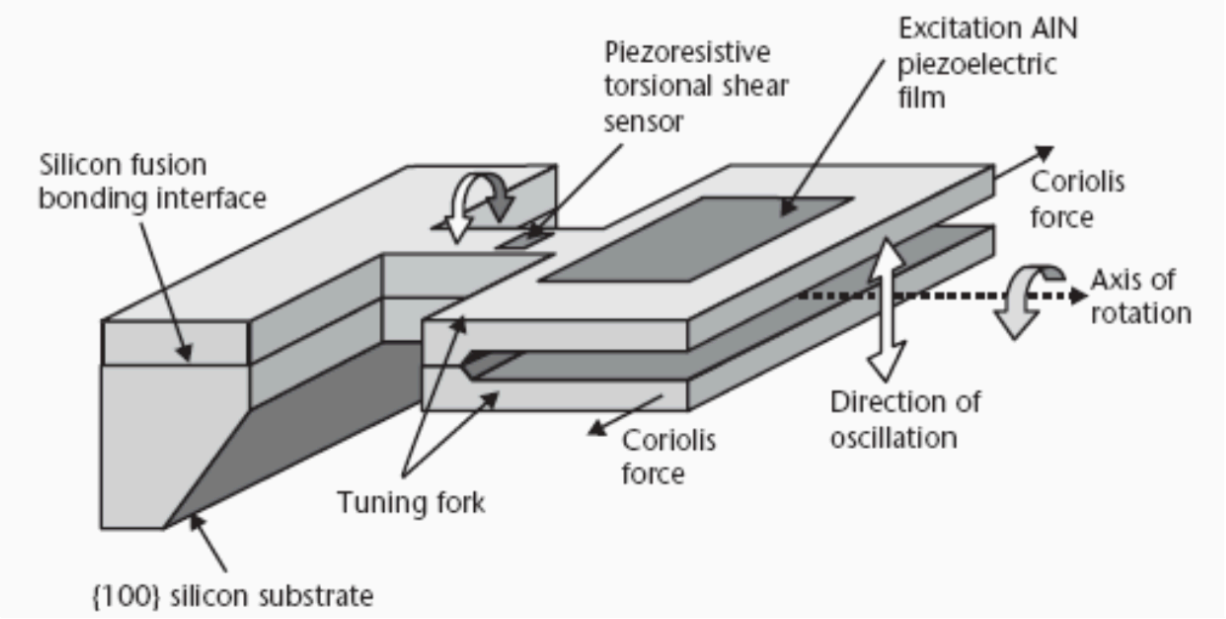
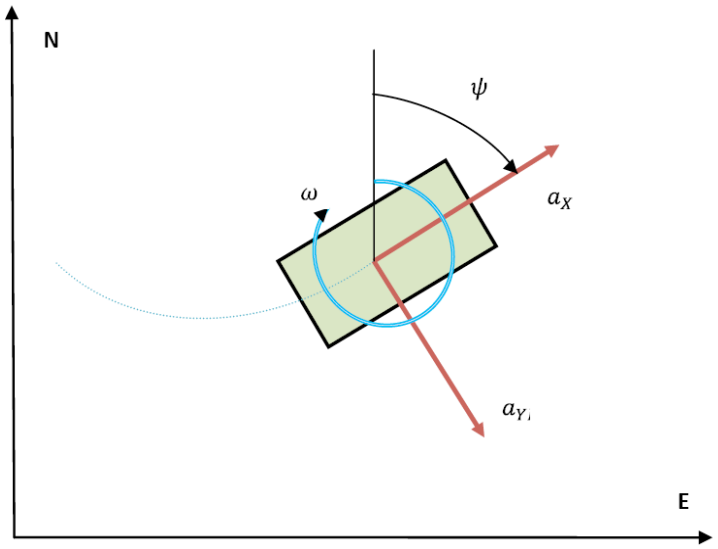


Figure 2.9 Angular-rate sensor from Daimler Benz

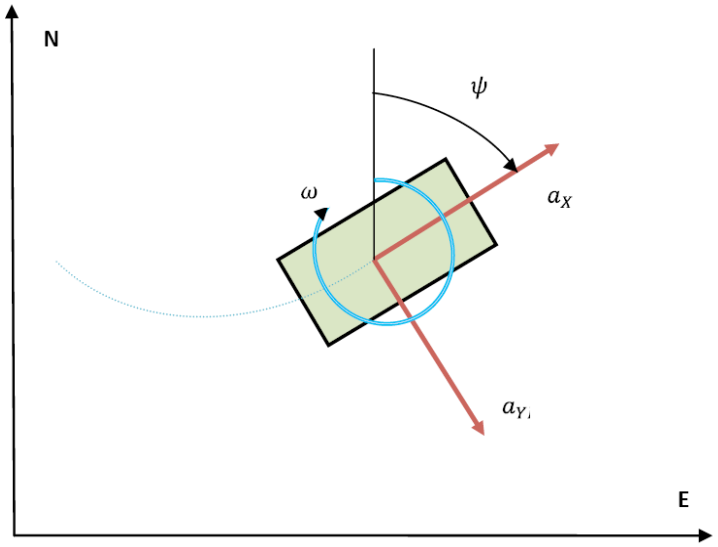
Source: Design and Analysis of a MEMS Comb Vibratory Gyroscope, Haifeng Dong MS Thesis

Two-dimensional navigation for strapdown system



Source: Basic Principles of Inertial Navigation
Seminar on inertial navigation systems
Tampere University of Technology

Two-dimensional navigation for strapdown system



Source: Basic Principles of Inertial Navigation
Seminar on inertial navigation systems
Tampere University of Technology

$$\begin{bmatrix} a_N \\ a_E \end{bmatrix} = \begin{bmatrix} cos\psi & -sin\psi \\ sin\psi & cos\psi \end{bmatrix} \begin{bmatrix} a_X \\ a_Y \end{bmatrix}$$

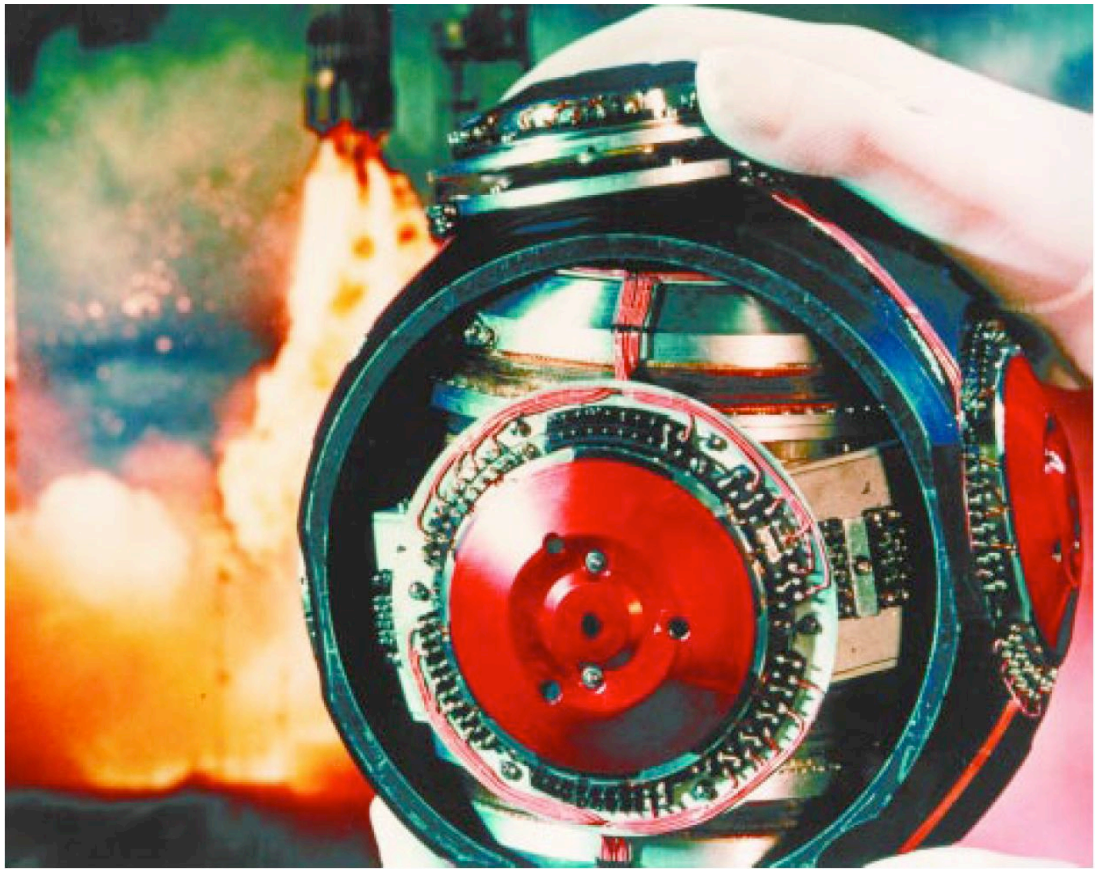
Equations for 2D Strap-Down INS

$$\begin{bmatrix} a_N \\ a_E \end{bmatrix} = \begin{bmatrix} cos\psi & -sin\psi \\ sin\psi & cos\psi \end{bmatrix} \begin{bmatrix} a_X \\ a_Y \end{bmatrix}$$

$$V_N(t) = V_N(t_0) + \int_{t_0}^{t} a_N(t)dt \qquad X_N(t) = X_N(t_0) + \int_{t_0}^{t} V_N(t)dt$$

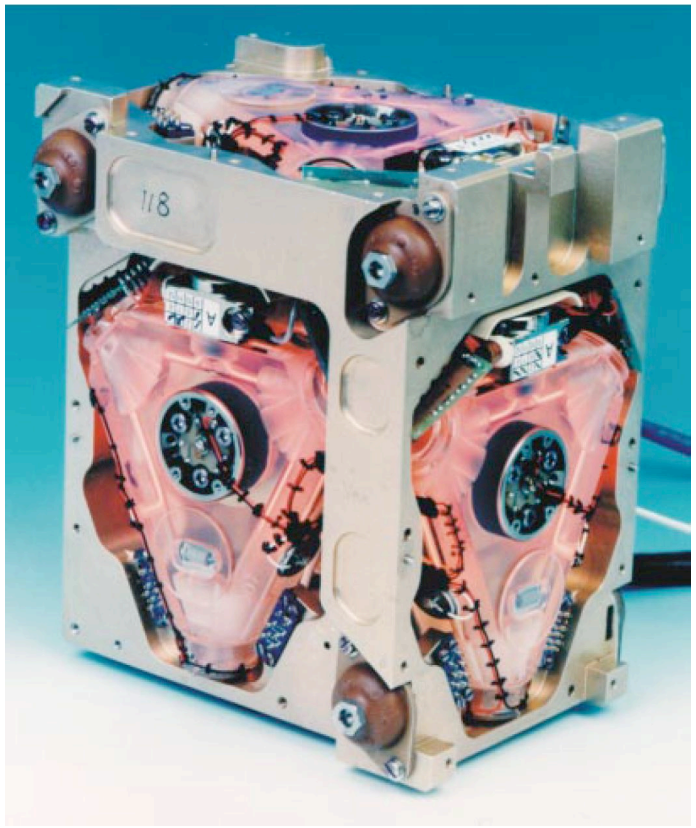
$$V_E(t) = V_E(t_0) + \int_{t_0}^{t} a_E(t)dt \qquad X_E(t) = X_E(t_0) + \int_{t_0}^{t} V_E(t)dt$$

Gimbaled INS example



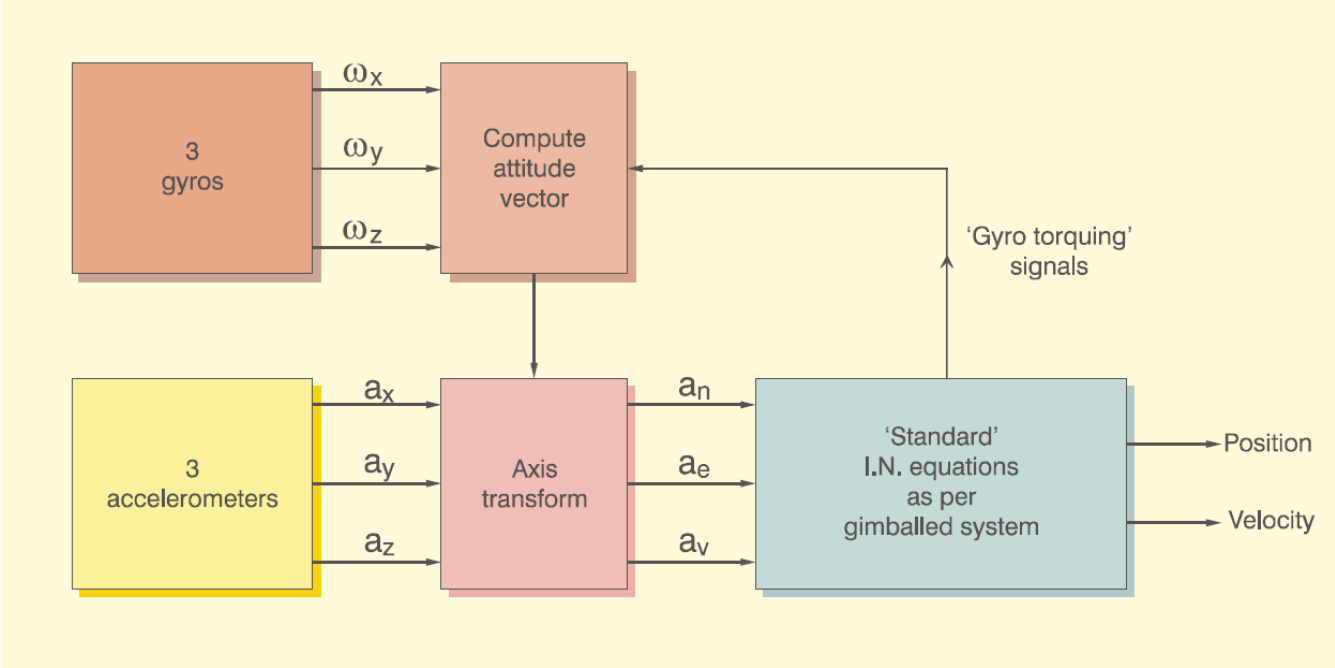
Source: Basic Principles of Inertial Navigation
Seminar on inertial navigation systems
Tampere University of Technology

RLG instrument cluster (Marconi FIN3110 strapdown INS)



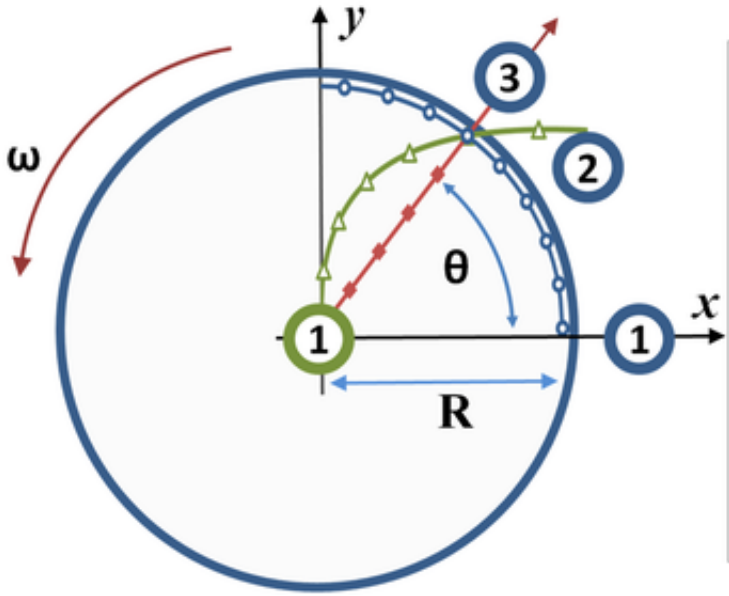
Source: Basic Principles of Inertial Navigation
Seminar on inertial navigation systems
Tampere University of Technology

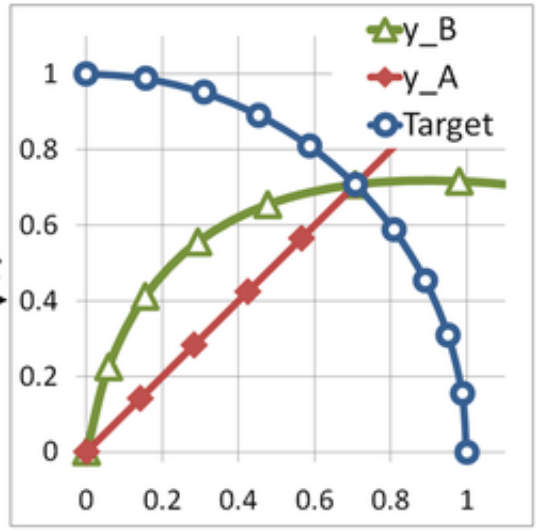
Strapdown inertial navigation unit block diagram



Source: Basic Principles of Inertial Navigation
Seminar on inertial navigation systems
Tampere University of Technology

Coriolis Effect





Source: Wikipedia

- https://www.youtube.com/watch?v=_36MiCUS1ro

Sources of Noise

Error Type	Description	Result of Integration
Bias	A constant bias ϵ	A steadily growing angular error $$\theta(t) = \epsilon \cdot t$$
White Noise	White noise with some standard deviation σ	An angle random walk, whose standard deviation $$\sigma_\theta(t) = \sigma \cdot \sqrt{\delta t \cdot t}$$ grows with the square root of time
Temperature Effects	Temperature dependent residual bias	Any residual bias is integrated into the orientation, causing an orientation error which grows linearly with time
Calibration	Deterministic errors in scale factors, alignments and gyro linearities	Orientation drift proportional to the rate and duration of motion
Bias Instability	Bias fluctuations, usually modelled as a bias random walk	A second-order random walk

Table 2: A Summary of Gyro Error Sources.

Source: An introduction to inertial navigation, Oliver J. Woodman, UCAM-CL-TR-696